To the Members of the Historical Landmark Commission:

Gentlemen:

It is our desire to maintain & restore our buildings as costs & monies will permit.

We have had to do this in phases as our income permits. The back end our l02 & 106 S. Main building has been restored in three previous phases. It is now time to maintain the windows. We would also like to do phase four & replace the stairs to match the rest of the structure. The stairs will have railings to match the railings of the structure, also the color will be the same. (see color sample attached) I have been told that paint stores that have a device called a "COLOR EYE" where one can take a sample & match the existing paint color. I would try to find a store that has one.

We are also required to comply with the Liability Insurance Underwriters guidelines to be able to purchase liability insurance. This design is in accordance with the requirements

This is our desire.

My grandfather Alfred Gordon Gilliat purchased this building 100 years ago so family pride is a factor in upkeep.

We would like to complete this project prior to winter weather & subject to our tenant's schedule as replacement of the stairs will not permit access to the 2nd floor. Fortunately, our tenant is an international photographer & travels. Therefore, dependent on the schedule our plan is to pre-fabricate as much as possible to minimalize down time.

Every thing is subject to contractors pre-committed work load & our ability to coordinate after an approved start date. (Not presently in our control)

The estimated erection construction will be 90 days max subject to coordination with our tenants & our permissible start date.

I am told there Is some Grant Money available to assist us. With your blessing it would help us with restoration.

Thank You

Alfred Gordon Gray

President

Gray, Hudson & Caldwell Properties LP

HISTORIC DISTRICT IMPROVEMENT PROGRAM
APPLICATION & INSTRUCTIONS

If you have any Historic District Improvement Program application or historic design and review questions, please contact the Planning & Community Development office at (830) 249-9511. If you have any building or sign permit questions please contact Code Enforcement office.

HISTORIC DISTRICT IMPROVEMENT PROGRAM DETAILS (please read carefully):
The City of Boerne (City) Historic District Improvement Program (Program) is a matching partial reimbursement grant opportunity for commercial properties located within the limits of the Historic District (District). Any proposed improvements or additions to any properties within the District shall first require approval by the Historic Landmark Commission (HLC) before a request for a Program grant can be considered.

New buildings and improvements that are already completed or covered by insurance are not eligible for this Program. Property to be considered for the Program shall; not have any delinquent ad valorem taxes, be free of all municipal and county liens, judgments and encumbrances of any kind. The property must remain free of all municipal and county liens, judgments or encumbrances of any kind at the time the project is complete and reimbursement request is made. The Applicant must also be current on all city utilities for the subject property and the property must not be listed in part or whole in any current litigation.

Qualifying Program Improvements include the following:

- Exterior improvements to facades;
- Roof repair/replacement;
- Foundation repair/replacement;
- Interior ADA improvements that are part of the structure such as accessibility structures, elevators, restroom improvements and widening of doorways;
- Building/Fire Code improvements such as electrical and plumbing upgrades and fire exits; and
- Complementary building additions

Maximum Matching Funds – Sliding Scale up to $14,500

Proposed Project Budget	Maximum Reimbursement Match
0-$24,999	$1:1 up to $5,000 max.
$25,000-$49,999	$7,500
$50,000-$74,999	$10,000
$75,000-$99,999	$12,250
$100,000 and above	$14,500

Application Program Scoring

Applications will be considered based on the building's historic significance as either contributing or non-contributing to the District, integrity ranking of original architectural elements of the building, type of proposed building improvements, and the estimated project cost. Please contact the Planning & Community Development office to get details of the building's historic significance, contributing/non-contributing status and integrity ranking. A minimum score of 20 points is required to qualify for Program consideration. Applications will be scored as follows:

A. Contributing/Non-Contributing & Integrity (High/Med/Low)	
Contributing Structure/High & Med	10
Contributing Structure/Low	8
Non-Contributing Structure	6
New Structure	4

B. Type of Improvements	
Existing Bldg. Façade/Roof/Found.	10
Existing Bldg. ADA/Elect./Plumb	8
Existing Bldg. Addition	6
New Structure	4

C. Estimated Project Budget	
($50,000 and up)	10
($25,000-$49,999)	8
($15,000-$24,999)	6
($0-$14,999)	4

All Program grants are available throughout the City's fiscal year; on a first come, first serve basis until total annual Program budgeted funds are allocated. Applications will be reviewed based on Article 8 Historic Landmark/Historic District Preservation of the City of Boerne Zoning Ordinance and Boerne Historic Design Guidelines and approved by HLC before any eligible work may begin. If application is approved, any deviation from the approved project scope may result in the total or partial withdrawal of the Program grant and will require reapproval from the HLC.

1. **Determine eligibility:** Discuss project plans with the Planning & Community Development staff. Article 8 of the City Zoning Ordinance and the Boerne Historic Design Guidelines should be a reference guide when making any proposed improvements to properties in the District. Both the ordinance and guidelines are available online at the City website www.ci.boerne.tx.us.

2. **Complete and sign Application Form.** Application must include a list of proposed improvements, plans/elevations of proposed improvements by the project architect or contractor of the entire proposed project work to be done. Color samples of all final paint, fixtures, material selections must be included with the application to be reviewed and approved by the HLC.

3. **Submit the completed Application Form:** Submit all itemized work estimates, drawings, and material/color samples of the proposed work to the Planning & Community Development office no later than 10 (ten) days prior to the first Tuesday of each month to be placed on the HLC agenda.

4. **The approval process will include without limitation the following:**
   (a) All projects must meet current building standards and codes, as well as building permit requirements.
   (b) The HLC meets at 5:30 p.m. every first Tuesday of the month, Applicant or Applicant's Representative is required to attend and present their project to the HLC for review and recommendation.
   (c) The HLC shall consider only applications which have been properly and fully completed and which contain all information required in the application or requested by staff.
   (d) The HLC has sole discretion in awarding grants. The HLC considers the following; grant amount requested, grant funds available for the Program, condition of the structure, scope and effectiveness of the proposed work, and overall quality and character of the proposed work.
   (e) Applicants receiving majority approval by the HLC shall complete the work described in the application within one (1) year from the date the grant is approved by HLC. If the Applicant is unable to complete work within that period, the Applicant may submit a written request to the City Manager for an extension to the completion date provided the extension request is made thirty (30) days prior to the one (1) year time limit. The City Manager shall not be obligated to allow extensions but may do so for good cause determined solely by the City Manager. The extension, if granted, shall be for the term and conditions determined exclusively by the City Manager. The City Manager's determination on a request for an extension is final and may not be appealed. If the Applicant is not granted an extension for the one (1) year completion date, the grant funds shall be forfeited.
   (f) As a condition of this Program and as part of the application process, the Applicant consents and shall allow City inspections to determine whether the grant should be awarded. If the grant is awarded to the Applicant, the City shall be allowed regular access to the building to determine whether the work is or is not in compliance with the application, city municipal codes and any ordinances applicable to the work approved and contemplated in the application.
   (g) An Applicant does not have a right to receive Program grant funds. The HLC and City staff shall consider any application within its discretionary authority to determine what grant amount would be in the best interest of the Program. The review criteria

may include, but shall not be limited to; historical appropriateness, compatible architectural design, streetscape objectives, and overall enhancement of the Historic District. Once awarded, the Applicant does not have a right to the grant funds until and unless all conditions of the Program have been satisfactorily met.

(h) The Applicant shall be required to furnish exterior photographs of the project as part of the application and also after the work is completed, as a condition of final grant reimbursement. Should the work not comply with the application, the Applicant will forfeit all grant monies.

(i) Commercial properties must be current on all City property taxes and City utility payments prior to any Program reimbursement payments and the Applicant is required to obtain all applicable City permits and City approvals before the grant is awarded.

(j) An Applicant who submits an application that was denied a grant by the HLC shall not be eligible to re-submit a grant application for the same project for six (6) months from the date the prior application was declined by the HLC.

(k) Applicant shall not be allowed to submit an application for the same property within three (3) years from the date a previous Program grant awarded by the HLC.

5. **Submit Reimbursement Request Form:** When the entire project has been satisfactorily completed and reviewed, the Applicant or Applicant's representative shall present the Planning & Community Development office with copies of all paid invoices, including copies of cancelled checks and/or credit card receipts, and pictures of the completed work for a single reimbursement payment of the approved funding amount.

6. **Appeal Process:** There is no appeal process, all completed applications will be reviewed and an award or denial decision made by the HLC.

7. **Repayment:** If awarded a Program grant, any deviation from the approved project may result in the partial or total forfeit of the Program grant funds. If the project is substantially altered within one (1) year from commencement of work, the City may require reimbursement immediately from the Applicant for the full amount of the Program grant.

HISTORIC DISTRICT IMPROVEMENT PROGRAM
PROGRAM CHECKLIST & IMPROVEMENT TIPS

Checklist

Use this form as a Checklist to follow all steps needed to complete the Program Application to receive approval.

- ☐ Meet with City staff of the Planning & Community Development office to determine eligibility and to walk through Program Application Instructions.
- ☐ At the same time of the initial application mtg., or subsequent to this meeting, meet with Planning & Community Development staff to discuss any questions or concerns regarding historic preservation issues.
- ☐ Verify with municipal and county offices that ad valorem taxes are current.
- ☐ Complete Application form and sign Agreement form. (Also include required attachments, HLC application, project drawings and specification, material selections, photographs of project exterior where work is to be done)
- ☐ Return completed Application with required attachments no later than ten (10) days prior to the first Tuesday of the month to the Planning & Community Development office to be added to the next HLC meeting agenda.
- ☐ Attend and present Program Application to HLC for recommendation.
- ☐ Project work must be completed within one (1) year from date of HLC Application approval.
- ☐ Upon completion of project, complete and submit the Reimbursement Request Form with required documentation.

Improvement Tips

- Carefully examine old buildings for termites, wood rot and general deterioration and roof, foundation and structural items should be given priority over cosmetic improvements.
- Before rehabilitating a building façade, take a careful look at the structural aspects of the building.
- Develop a design that is compatible with neighboring buildings
- The top brick cornices that rise above the roof deteriorate rapidly unless they are capped with metal, terra cotta, stone or concrete.
- When mortar is missing or in poor repair, moisture will enter the walls and eventually may cause structural damage.
- Deteriorated mortar should be removed to a depth of at least three-fourths of an inch and replaced with new mortar that matches the old in color, texture and striking of the joint.
- Do not sandblast. Chemicals and/or water can remove dirt and paint without damaging the surface of the building.
- Do not paint too often; many times a building only needs mild washing, if the building has stone or brick that has never been painted, do not create a maintenance problem by painting it.
- Existing architectural details, including old wood doors, windows, ceilings, and trim work add to the character of a building and its resale value. Repair these features rather than remove them.
- Wood windows are reasonable to repair, if a specialist in window repair can be found. If the windows are missing, custom-made windows can be ordered for replacement in old buildings.

Boerne

HISTORIC DISTRICT IMPROVEMENT PROGRAM
APPLICATION FORM

Please return completed with necessary attachments and signature to the Planning & Community Development office no later than the ten (10) days prior to the first Tuesday of each month. For information, please contact the Planning & Community Development office.

Applicant Name: Alfred G. Gray Date: 21 June 2019

Applicant Mailing Address: Gray Hudson & Caldwell PO Box 362 Boerne TX 78

Applicant Phone: 830.537.9137 Email: aggray1@gvtc.com

Property Ownership Entity *(if different from Applicant)*: Gray Hudson & Caldwell LLC

Property Address: 102 S. Main, Boerne Texas 78006

Project Architect/General Contractor *(if applicable)* River City Industries

Project Estimated Start and Completion Dates: August 7, 2019 - October 7, 201

Type of Work: *(circle all that apply)*

Paint ● Masonry ● Cleaning/Paint Removal ● Awning/Canopy ● Window Repair/Replacement ● Roof Repair/Replacement ● Foundation Repair ● Interior ADA Improvement that is part of the structure (accessibility structures, elevators, restroom improvements, widening doorways) ● Building/Fire Code Improvements (such as electrical and plumbing upgrades and fire exits) ● Other (detail below):

Other:

List Details of Planned Project Improvements for Program Grant (attach additional details if necessary):

See p. 11, 12

TOTAL COST OF PROPOSED PROJECT IMPROVEMENTS: $28,539.26

GRANT AMOUNT REQUEST (based on sliding scale): $7,500.00

I attest that at the time of this Application, property to be improved; (1) does not have any delinquent municipal ad valorem taxes, (2) is current on all municipal utility payments; (3) is not listed in part or whole in any current litigation, and (4) is free of all municipal liens, judgments and encumbrances of any kind.

Attach with all required plans/drawings, construction/material estimates, color samples of paint/material, and photographs of project's exterior conditions prior to planned project improvements.

Alfred G. Gray 21 June 2019

Applicant's/Representative Signature **Date**

City of Boerne

HISTORIC DISTRICT IMPROVEMENT PROGRAM
AGREEMENT FORM

Please return completed with necessary attachments and signature to the Planning & Community Development office at 402 E. Blanco Rd. no later than the ten (10) days prior to the first Tuesday of each month. For information, please contact the Planning & Community Development office.

☑ I have met with the City Program representative for the Historic District Improvement Program, and I fully understand the Program procedures and details established by the City.

☑ I have read the Program Application Form.

☑ I attest that at the time of this Agreement that the property to be improved (1) does not have any delinquent municipal ad valorem taxes; (2) is current on all municipal utility payments; (3) is not listed in part or whole in any current litigation, and (4) is free of all municipal liens, judgments and encumbrances of any kind.

☑ I have not received, nor will I receive insurance monies for this project.

☑ I understand that if I am awarded a grant by the City, any deviation from the approved project may result in the partial or total withdrawal of the Program grant. If the project is substantial altered within one (1) year from construction, I may be required to reimburse the City immediately for a prorated amount of the grant, based on extent of alteration to the improved property that qualified for Program funding.

☑ I understand and agree that any misrepresentation on this application form will result in immediate denial of request for the Program grant and the inability to re-apply for same. Should such misrepresentation be discovered after an award of funds, then I shall forfeit and/or return any Program funds.

102-106 S. Main St., Boerne TX 78006
Property Address

Alfred G. Gray — 21 June 2019
Applicant's/Representative Signature — **Date**

(If approved) HLC Approval Date

HISTORIC DISTRICT IMPROVEMENT PROGRAM
REIMBURSEMENT REQUEST FORM

Please return completed form with necessary documentation listed below to the Planning & Community Development office. If you have any questions regarding this form, please contact the Planning & Community Development office.

Please Attach the Following Documentation:

1. Final bill outlining all construction materials and labor cost associated with the approved project scope.
2. Proof of payment for all construction materials and labor – cancelled checks, credit card statements, etc.
3. Pictures illustrating the completion of the project.

Please notify the Planning & Community Development office upon final project completion so that a final inspection can be conducted by city staff.

The City reserves the right to withhold the Program grant funds approved until all work is completed as agreed upon. The City reserves the right to deny the Program grant funds if the work has not been completed as approved by the HLC.

102 S. Main St., Boerne, TX 78006
Physical Building Address

_____
Date of Project Completion

_____
Total Final Project Cost

_____
Amount of Grant Funds Approved

_____
Amount of Grant Funds Requested

I attest that at the time of my project completion, property to be improved; (1) does not have any delinquent municipal ad valorem taxes; (2) is current on all municipal utility payments; (3) is not listed in part or whole in any current litigation, (4) is free of all municipal liens, judgments and encumbrances of any kind, and (5) have not received or will receive any insurance monies for the work at the time the grant reimbursement request is made.

_____ _____
Applicant's/Representative Signature **Date**

Quotation

RIVERCITY INDUSTRIES

11734 Nacogdoches Rd.
San Antonio, TX 78217
www.rivercity-industries.com
Phone: 210-590-0300
Fax: 210-590-0324

DATE 5/2/2019
Quotation # 101 PG1

Quotation Prepared For:

A.G . GRAY
15 NOLLKAMPER RD
BOERNE TX 78006
JOB SITE: 102 SOUTH MAIN

SALESPERSON	TARGETED DUE DATE	SHIP DATE	SHIPPING INSTRUCTIONS	TERMS
SJ	N/A	N/A	F.O.B. Rivercity Industries	VIEW PG2

MATERIAL PROVIDED BY	MATERIAL DESCRIPTION	CUSTOMER PO NUMBER

QUANTITY	DESCRIPTION	UNIT PRICE	TAXABLE?	AMOUNT
	JOB SITE ADDRESS: 102 SOUTH MAIN SCOPE OF WORK TO BE PERFORMED: STAIR CASE DEMO AND REMOVE THE OLD WOOD STAIRCASE ON THE BACK SIDE OF THE BUILDING AND REPLACE IT WITH ALL NEW ALL STEEL CONSTRUCTED STEEL STAIRCASE. UPON COMPLETIONS OF INSTALL PAINT THE STAIRCASE. ALL TREADS, RISERS AND LANDING SURFACE WILL BE DIAMOND PLATE STEEL 1/8" FORMED RISERS AND TREADS 10" CHANNEL 8.4LBS PER FOOT WILL FRAME THE LANDING AND ALL STRINGERS. MAKE AND INSTALL HAND RAILS TO MATCH EXISTING ON BALCONY WINDOWS REMOVE ALL DEAD WOOD AND REPLACE WITH NEW BACK PRIMED WOOD. RE-GLAZE ALL WINDOWS AND NEW PAINT EXTERIOR AND INTERIOR WINDOWSILLS JAMS AND FRAMES.			

JOB CONTACT NAME & PHONE:

SUBTOTAL	$ -
TAX RATE	8.250%
SALES TAX	-
OTHER	
TOTAL	0.00

TAX INFORMATION — Please "X" in the appropriate box below:

Customer is tax exempt & will provide a tax exempt certificate	
Charge tax	X
Tax exempt on file	

If you have any questions concerning this quotation, please contact our offices at: 210-590-0300

Quotation

RIVERCITY INDUSTRIES

11734 Nacogdoches Rd.
San Antonio, TX 78217
www.rivercity-industries.com
Phone: 210-590-0300
Fax: 210-590-0324

DATE 5/2/2019
Quotation # 101 PG2

Quotation Prepared For:

A.G . GRAY
15 MOLLKAMPER RD
BOERNE TX 78006
JOB SITE: 102 SOUTH MAIN

SALESPERSON	TARGETED DUE DATE	SHIP DATE	SHIPPING INSTRUCTIONS	TERMS
SJ	N/A	N/A	F.O.B. Rivercity Industries	VIEW BELOW

MATERIAL PROVIDED BY	MATERIAL DESCRIPTION	CUSTOMER PO NUMBER

QUANTITY	DESCRIPTION	UNIT PRICE	TAXABLE?	AMOUNT
	JOB SITE ADDRESS 102 SOUTH MAIN			
	COMPLETE STAIR CASE FIRST THEN LET PAINTERS			
	TAKE OVER THE MAN BOOM LIFT AND			
	THE LULL			
1	LULL - EQUIPMENT RENTAL	$2,000.00		2,000.00
1	BOOM MAN LIFT - EQUIPMENT RENTAL	$2,000.00		2,000.00
1	MATERIAL STEEL	$5,577.12		5,577.12
1	FABRICATION LABOR	$3,170.00		3,170.00
1	INSTALL (3 MEN/5 DAYS)	$7,800.00		7,800.00
1	PAINT MATERIALS	$1,700.00		1,700.00
10	WINDOW LABOR	$430.00		4,300.00
	TERMS: 30% DOWN			
	30% FIRST DAY			
	30% LAST DAY			
	10% UPON CUSTOMER ACCEPTANCE			

JOB CONTACT NAME & PHONE:

SUBTOTAL	$ 26,547.12
TAX RATE	8.250%
SALES TAX	1,992.14
OTHER	
TOTAL	28,539.26

TAX INFORMATION — Please "X" in the appropriate box below:

Customer is tax exempt & will provide a tax exempt certificate	
Charge tax	X
Tax exempt on file	

If you have any questions concerning this quotation, please contact our offices at: 210-590-0300

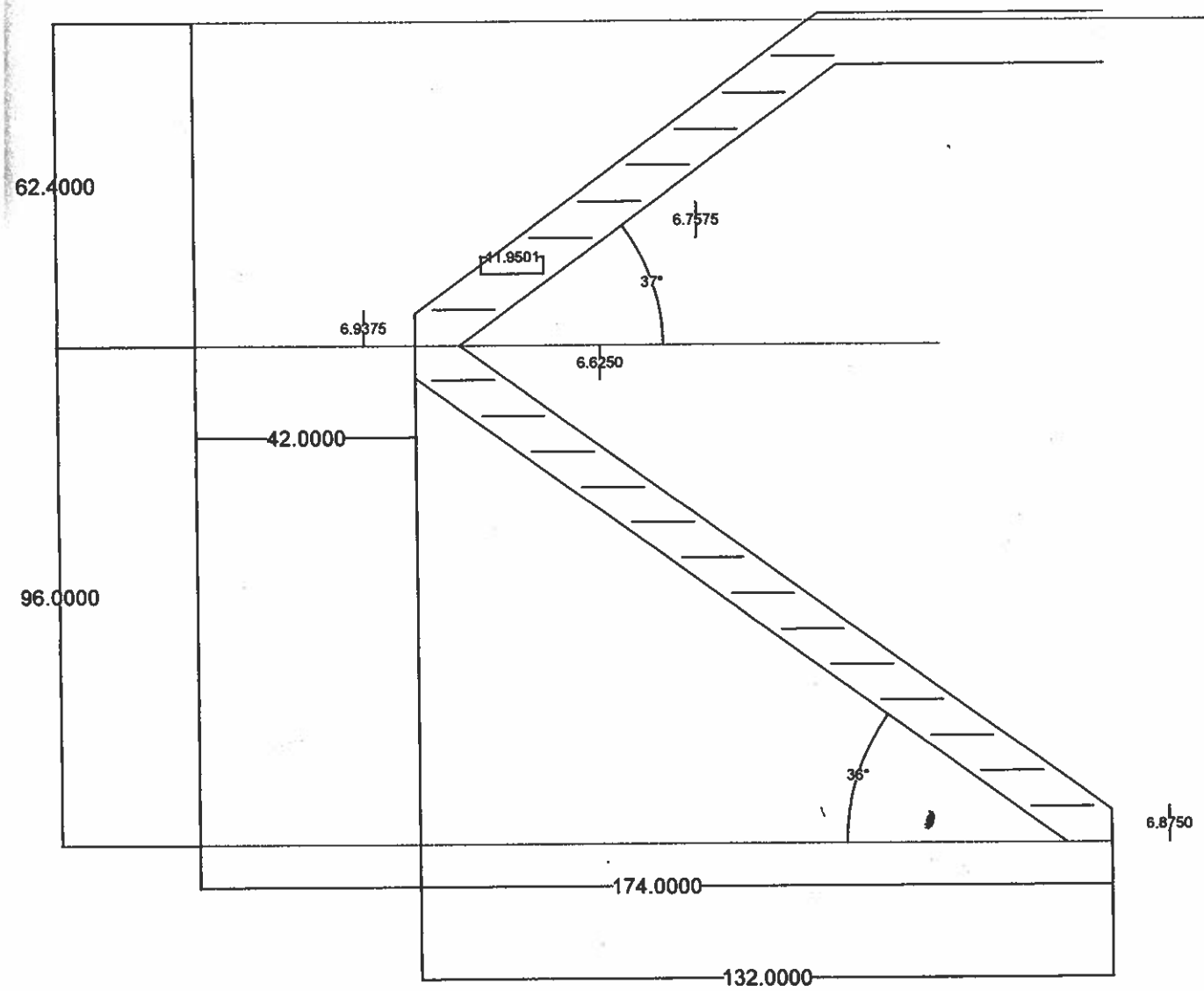
62.4000
6.7575
11.9501
37°
6.9375
6.6250
42.0000
96.0000
36°
6.8750
174.0000
132.0000

W

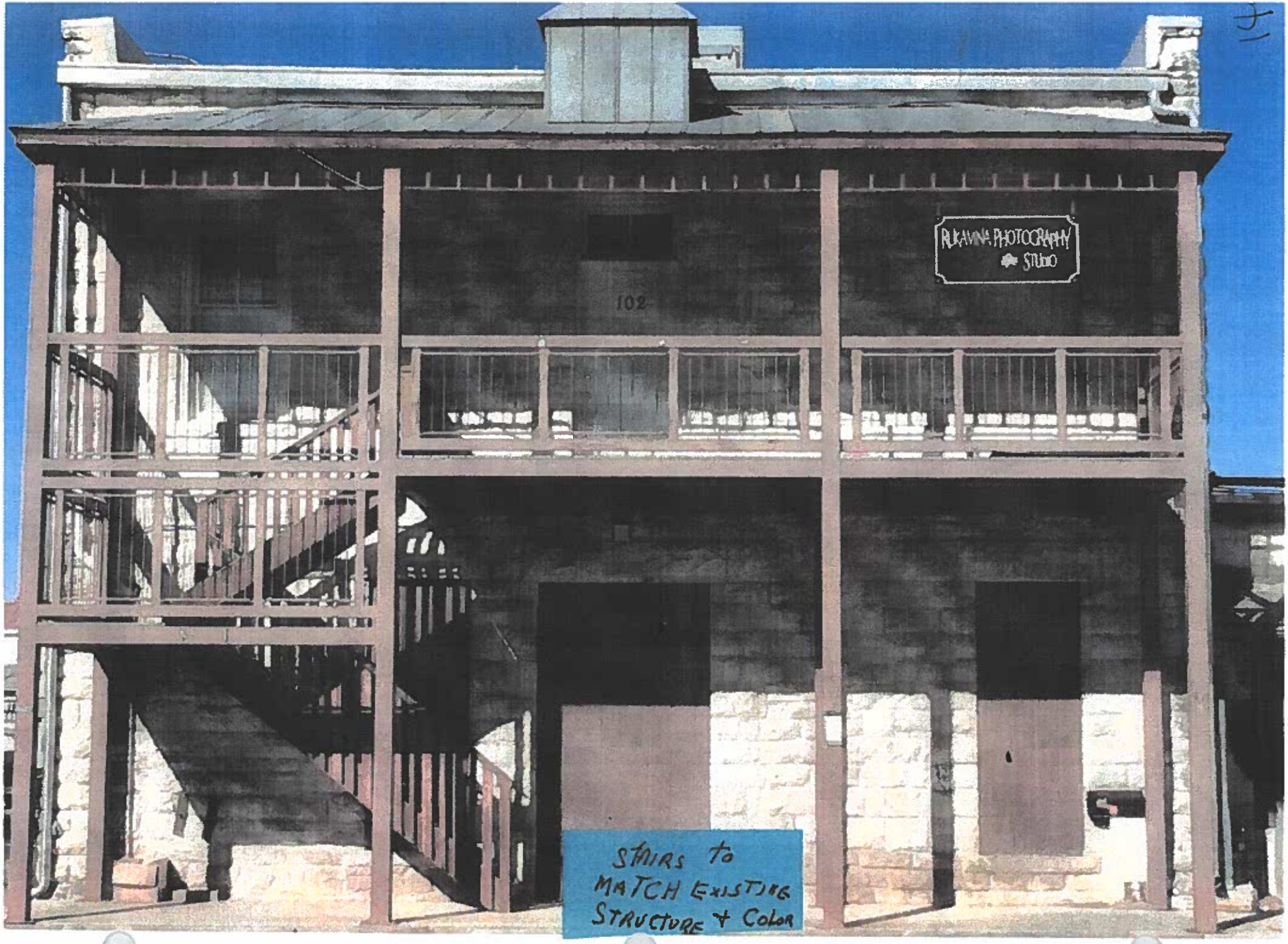
RUKAVINA PHOTOGRAPHY
STUDIO
102
STAIRS TO
MATCH EXISTING
STRUCTURE + COLOR

REPLACE
PHASE 4

16

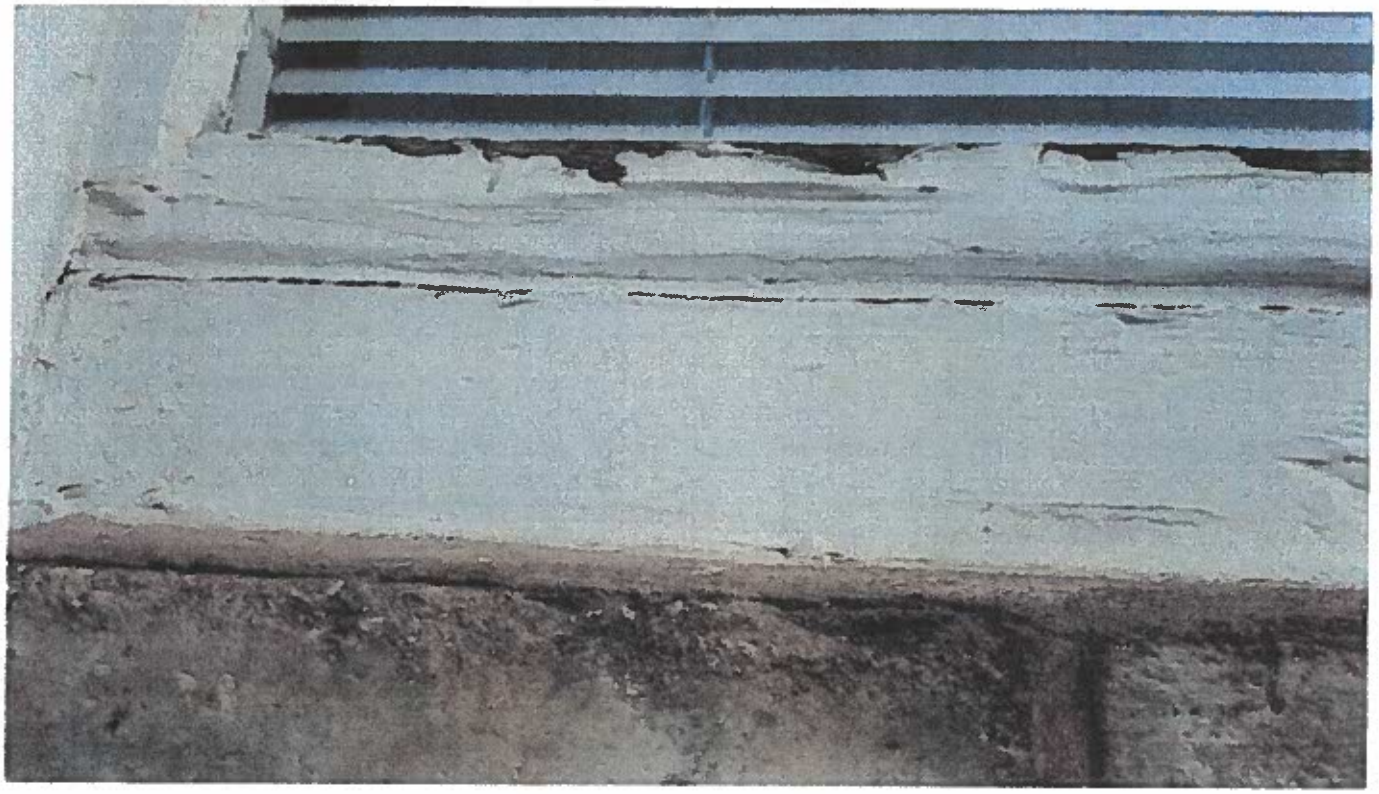

NEEDED
MAINTANCE
SCRAPE +
RE PAINT
SAME COLOR

17

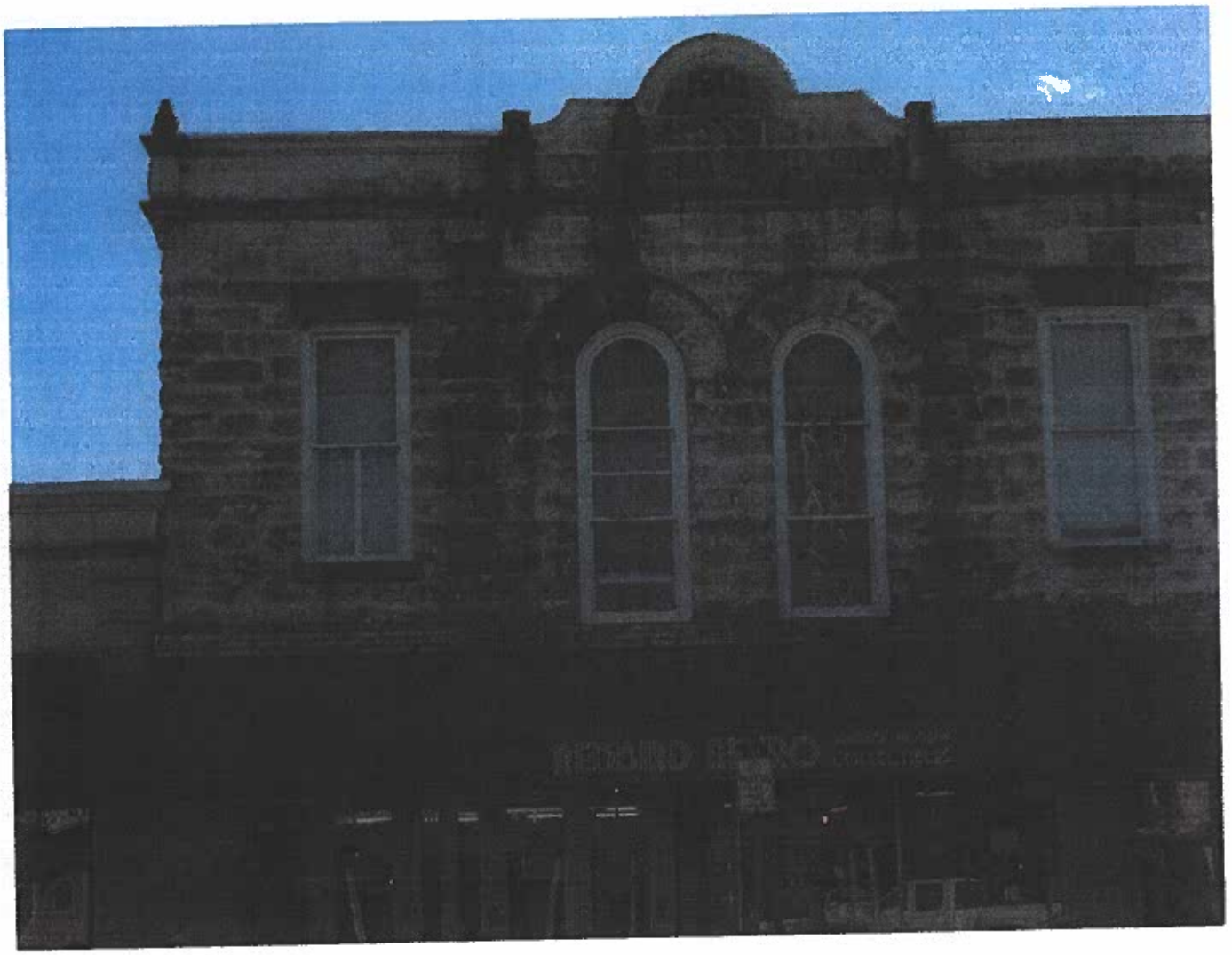

20

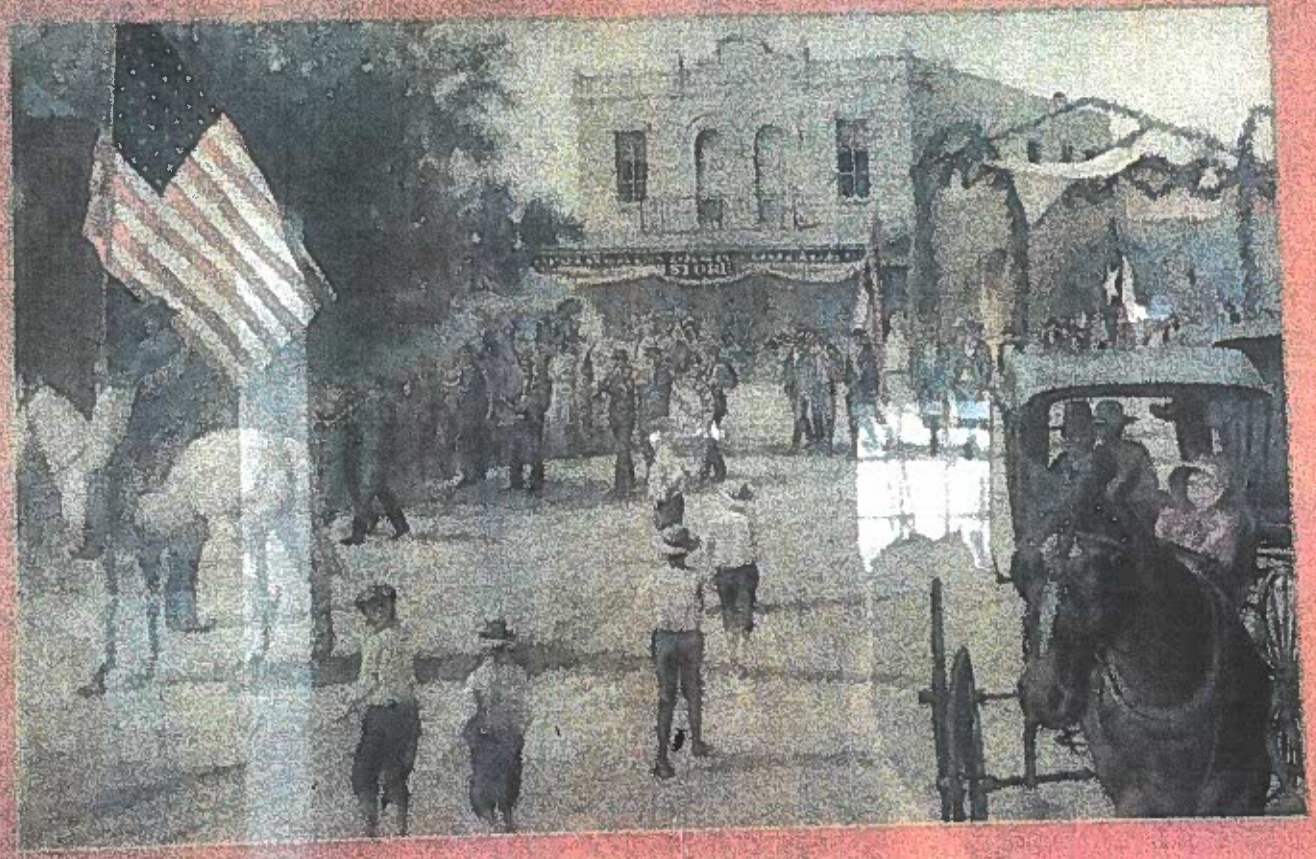

Kendall County Fair Parade

RECOLLECTIONS
of
BOERNE and KENDALL COUNTY

Compiled by

EDITH A. GRAY

1949

22

Edith Agnes (Gilliat) Gray

2

Foreward

Recollections of Boerne and Kendall County consists of material collected by Edith Agnes (Gilliat) Gray as a result of her appointment as the historian for an event to be held in 1949 commemorating Boerne's history and entitled "Boerne's Centennial." Plans to publish a book containing the information she collected did not materialize because of limited time and financial resources. This was a great disappointment to Edith as she had told contributors that the information would be printed.

In 1999, when the City of Boerne planned the celebration entitled the "Boerne Sesquicentennial," the children of Mrs. Gray produced a book containing most of the historical information. With constraints on available space, time and money, the family histories were not included in that volume. Now, we, Edith Gray's descendants, have put together for publication, the **Family Histories** submitted by donors beginning in 1949. Edith continued to collect information until the time of her death in 1975. Some reports were updated by contributions through the years. Most of it reflects information known to the contributor in 1949. Over 200 family names appear in the current volume.

Much appreciation is extended to Elizabeth Harkness Hudson for her knowledge of modern technology, for entering the information into the computer, for teaching us new methods and for helping us over the rough spots. Alfred Gordon Gray, again, has helped with the production of this volume.

See the end page for information about the availability of the first volume, **Recollections of Boerne and Kendall County** and this volume, **Family Histories.**

Year 2003

Elizabeth (Gray) Hudson
Editor

Cover Picture: A 1911 picture of the Gilliat/McDonald families with their first car, an Overland. Left to right: Mary Agnes, "Dolly," (McDonald) Cochrane; Alfred McDonald Gilliat; Eliza Mary Stephen, "Bessie," (McDonald) Gilliat; Alfred Gordon Gilliat; Edith Agnes Gilliat; and Elizabeth Urquhart (Ritchie) McDonald. In 1881, Mrs. McDonald moved from Glasgow, Scotland, to San Antonio, Texas, with four children, ages 9 to 16 years. Mary Agnes, age 16, supported the family for the first few years by teaching. She retired as Principal of Smith School in San Antonio, in the early 1930's, and moved to Boerne. She named her home on North Main St., "Braeside." There, she moved the library that the family had brought from Scotland, along with her own library. Upon Mary Agnes' death, her niece, Edith Agnes (Gilliat) Gray, and her family moved into the house. She, in turn, began to add a great number of books. In addition, she collected a large vertical file developed from periodicals given to her by local residents, along with her own subscriptions to magazines. All materials were indexed. This became the Edith A. Gray Library. Mrs. Gray shared the use of her Library with Boerne residents and school students until her death in 1975. It was the first public-use library in Boerne. All of the persons pictured are buried in the Boerne Cemetery.

THEODORE GERFERS

Mr. Gerfers was born in Dusseldorf, Prussia, February 1, 1809, and came to America. The youngest son, Frederick Gerfers, married Alberta Leistkow, a daughter of Chas. Leistkow who came from Labenz, Germany in 1851. The Gerfers children are Charles and Jennie.

ALFRED GORDON GILLIAT

Alfred Gordon Gilliat was born in Hampreston Dorset England on November 8, 1860, the first child of Alfred Gilliat and the only chold of Emma Lett Clowes Gillliat. Mrs. Gilliat contracted scarlet fever from the physician who attended her in the birth. She died November 24, 1860. Alfred Gordon also contracted the disease, which caused his eardrums to burst, leaving him deaf all of his life. He was educated at a school for the deaf in Brussels, Belgium, where he learned to lip-read.

Mr. Gilliat arrived in the United States in 1881 and traveled to Boerne, Texas. He made at least one trip up the Western Trail with cattle. He registered a cattle brand in Kendall County in 1883, and found work on the ranch of Baron Leo von Brandenstein northwest of Boerne. He was active with the Cricket Team and other activities of the English settlement in the area. The home burned in 1890, and two years later, he bought the ranch from the von Brandensteins.

Mr. Gilliat began to work the ranch, buying a great deal of equipment, clearing fields and cultivating and planting crops, along with raising cattle and horses. In 1898, he bought the MacKenzie tract, giving him 1400 acres. By the time of his death in 1916, he had cleared and put into cultivation, six fields, totaling 378 acres, the greatest acreage in Kendall County.

On October 12, 1897, he married Eliza Mary Stephen McDonald, who was born in Glasgow, Scotland, on February 21, 1873. She came to Texas in 1881 with her mother, Elizabeth Urquhart Ritchie McDonald and three siblings. They settled east of San Antonio to develop dairy farming. Edith Agnes born on October 23, 1898, and Alfred McDonald, on January 24, 1900, were the Gilliats' two children.

In 1902, Mr. Gilliat began to invest in the development of the town of Boerne. By the time of his death, he had developed five lots in the center of the town, constructing masonry buildings and leasing them to a large number of diverse retail merchants over time.

St. Helen's Episcopal Church was established in 1881. Following his arrival, he attended and supported the congregation. He bacame an officer of the vestry beginning in 1899, serving as the Senior Warden for fourteen years. Although deaf, he read services from 1904 to 1914. He directed the construction of the first rectory, and contributed the limestone rocks for the sanctuary built in 1929.

Alfred G. Gilliat and all of the members of his family were active members of the Kendall County Fair Association, through the years. Mrs. Gilliat was the first Lady Manager, followed by her daughter, Edith Gilliat Gray. His son, Alfred McDonald

Gilliat, served as the Secretary and Treasurer of the organzation from the mid-1930's until his death.

The Gilliats' daughter, Edith Agnes, married Alfred Gray on August 10, 1926. They had three children; twins, Edith Mary and Elizabeth Anne, born on April 14, 1927; and Alfred Gordon, born July 18, 1930.

Their son, Alfred McDonald, married Harriet Elizabeth Sandidge of Frot Worth, Texas, on June 11, 1933. They had two children: Alfred McDonald, Jr., born November 1, 1942; and Mary Elizabeth, born May 15, 1944.

Alfred Gordon Gilliat died at the ranch, on February 11, 1936. Mrs. Gilliat died in San Antonio, Texas on December 6, 1948.

J. J. GOMBERT

By Mrs. Fritz Reinhard

Julius Justin Gombert was born in 1820 and his wife Susanna in 1823. The Gomberts came from Germany in 1845, and settled on Spring Creek. Mr. Gombert was a painter and decorator by trade, and not being able to make a living on the farm, sought work in San Antonio, where he worked until his untimely death in 1858. Mrs. Gombert moved back to the farm with her five children:

Matilda (Wagner) of Fredericksburg

Wilhemina (Betz)

Katherine, wife of Chas. Ammann (see Ammann)

Henry married Amelia Fabra. He was drowned while crossing the Cibolo Creek when in flood with his wagons and six yoke of oxen to each wagon. Adam Phillip went for help but was too late to save Mr. Gombert. His widow later married Fritz Ebel of Sisterdale.

Herman married Julia Pieper. Children are: Willie, Ida (Lichtenberg), Fritz, Augusta, Arthur, Herman, Katie, Ernst and Dietert.

JOHN GONDER

By Mrs. Perry Lovelady

John Peter Gonder was born in Aigle Switzerland, on August 10, 1839. He went to Milwaukee, Wisconsin in 1860. He was married in 1869, and moved to Montgomery, Louisiana in 1870. While living in Louisiana he contracted T. B. and was advised to move to Boerne, arriving here in 1878. He opened a shoe repair and watchmaker shop, while living here and continued in the same, until about a year before his death, in 1881. A daughter, Mrs. Perry Lovelady, lives in San Antonio.